PV27/RL-LL - PV40/RL-LL

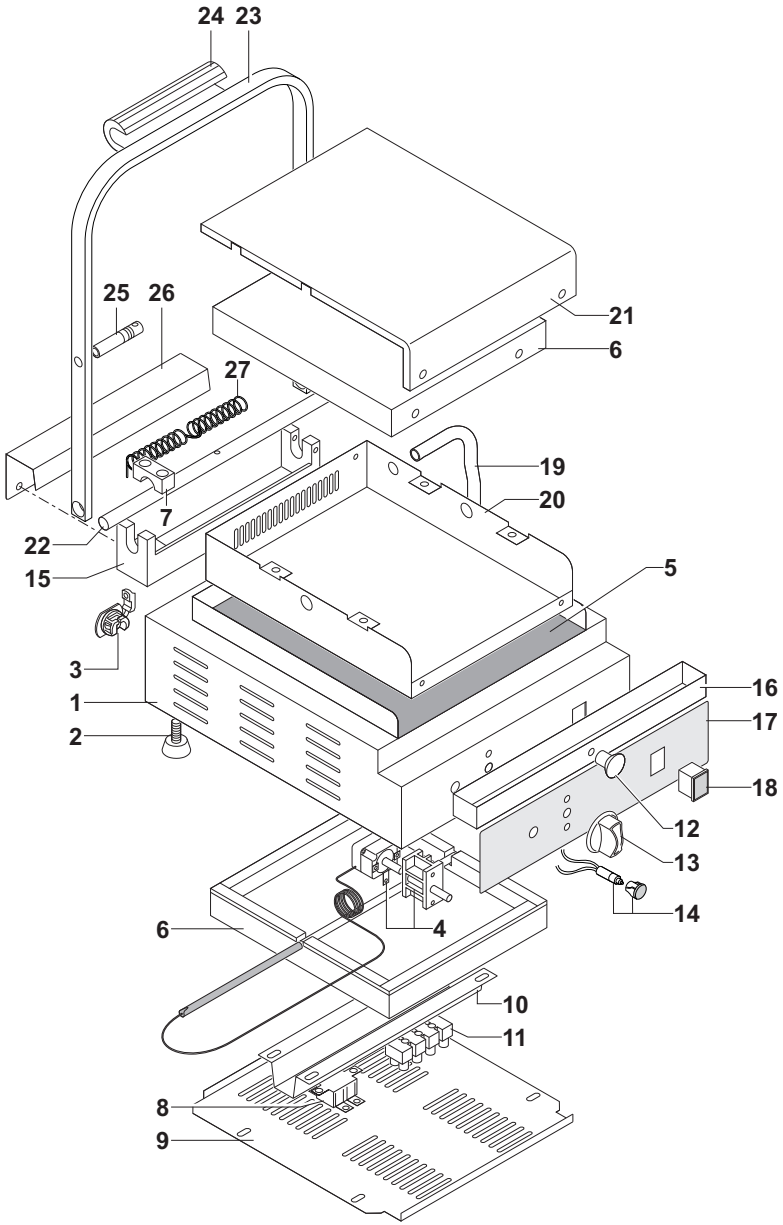

IDM-34601700501.pdf